MERCURY (75 (3 CYL.))
Serial Nbr Range: 0D283222 THRU 0G760299 (USA)

CO-PILOT

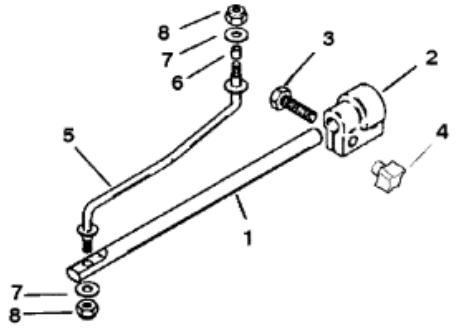

Parts List

Ref	Class	Part	Description	Qty	Comment	Footnote
-		52148A 6	CO-PILOT REPLACEMENT	1	ROD LENGTH IS 12-5/8 IN.	
1		52148	PILOT ROD	1	ROD LENGTH IS 12-5/8 IN.	
-	56	52148A 7	CO-PILOT REPLACEMENT	1	ROD LENGTH IS 14-5/8 IN.	
1		52148 1	PILOT ROD	1	ROD LENGTH IS 14-5/8 IN.	
2	11	52155A 1	NUT ASSEMBLY	1		
3	10	36137	SCREW	1		
4		821621	KNOB-PRONG	1		
5		87349 1	ROD	1		
6	23	52151 2	BUSHING	1		
7	12	70132	WASHER	2		
8	11	45592	NUT	2		